Model
450AJ
ARTICULATING BOOM LIFT

MORE ECONOMIC
- Cut fuel consumption and operating costs with variable engine control.

MORE PRODUCTIVE
- Start work quicker with industry leading elevation time.
  (* 50% faster compared with previous model. Actual timings may vary.)
  Carry more tools and materials and be able to work longer with 250 kg basket weight capacity.

MORE ACCESS
- Increase your work envelope with more horizontal reach. (*Compared with previous model.)

SMART DESIGN
- Reduce maintenance with DuraTough turntable hood. High impact resistance and protects components.

Standard Features

- 1.24 m (4ft 1in) Articulating Jib
- 0.76 m x 1.83 m (30in x 72in) Platform Side Entry
- 180 Degree Hydraulic Platform Rotator
- Platform Console Machine Status Light Panel*
- AC cable to Platform
- 5 Degree Tilt Alarm/Indicator Light
- Swing Out Engine Module
- Dura Tough gull-wing turntable hoods
- 12V-DC Auxiliary Power
- Hourmeter
- Interactive Display at Ground Controls
- Control ADE® Advanced Design Electronics System
- Lifting/Tie Down Lugs
- Horn
- Four-Wheel Hydrostatic Drive
- Oscillating Axle
- Cast Aluminum Control Box
- Motion Alarm
- Platform Tool Tray
- Side entry with drop bar mid rail
- Multiple function operation
- Full proportional drive joystick control with integral thumb steer switch
- Full proportional main boom and swing joystick control
- Multiple speed control for telescope and platform rotate
- Selectable creep speed on drive / lift and swing functions
- Load sensing system
- Engine distress warning/shut down system
- Ground control selector switch with key lock
- Dual rated platform capacity up to 450 kg
- JLG Skyguard active system

* Provides indicator lights at platform control console for system distress, low fuel, 5 degree tilt light, and foot switch status.

Standard Specifications

Power Source	
• Diesel Engine	Deutz D2.3 L3 Stage IIIA 36.4 kW
• Fuel Tank Capacity	60.5 L
Hydraulic System	
• System Capacity	144 L
• Tank Capacity	60.5 L
• Auxiliary Power	12V-DC
Tyres	
• Standard	33/1550 x 16.5 foam Filled tyres
• Optional	315/55 D20 foam filled tyres Non-Marking Tires

[1] Includes boom wipers, cylinder bellows and console cover.

Note: Some options may increase lead time, and some option combinations may not be available.

Accessories & Options

- 0.76 m x 1.22 m slide bar side entry platform
- 0.76 m x 1.22 m Self closing inward swing gate
- 0.76 m x 1.52 m slide bar side entry platform
- 13 mm airline to platform
- Flashing Amber Beacon
- Hostile Environment Kit [1]
- Light Package
- Platform Worklights
- Skypower 7,500W generator package
- PipeRack
- Catalytic exhaust purifier
- On-board 4,000W generator
- Skyguard beacon (ILOS)
- Tow package
- Cold weather package
- Generator hourmeter
- Hydraulic Oil Cooler
- Synthetic Biodegradable Hydraulic Oil
- All motion alarm
- Head & Tail Lights
- Euro Plug & Socket
- Special paint colour
- Foam filled (flip for ship) 315/55 D20 Tyres
- Non Mark FF (flip for ship) 315/55 D20 Tyres

EQUILIFT
SOLUCIONES EN EQUIPO DE ELEVACIÓN
844 881 0363
www.equilift.net
saltillo@equilift.com.mx
Renta, venta y servicio técnico

Model

450AJ

ARTICULATING BOOM LIFT

Performance

• Working Height	15.77 m
• Working Outreach	8.27 m
• Up and Over Height	7.3 m
• Swing	355 Degrees Non-Continuous
• Platform Capacity	250 kg
• Platform Size	0.76 x 1.83 m
• Platform Rotator	180 Degrees Hydraulic
• Dimensions:	
A. Platform Size	0.76 m x 1.83 m
B. Overall Width	2.35 m
C. Tailswing (working condition)	Zero
D. Stowed Height	2.27 m
E. Stowed Length	6.58 m
F. Wheelbase	2.36 m
G. Ground Clearance	0.42 m
• Jib	1.24 m
• Range of Articulation	144 Degrees (+76, -69)
• Weight [1/2]	6,495 kg
• Max Ground Bearing Pressure [2]	4 kg/cm^2
• Drive Speed	6.8 km/h
• Gradeability	45%
• Axle Oscillation	10 cm
• Turning Radius	
Inside	2.06 m
Outside	4.78 m

[1] Certain options or country standards may increase weight and/or dimensions

[2] With Standard tires

Reach Diagram

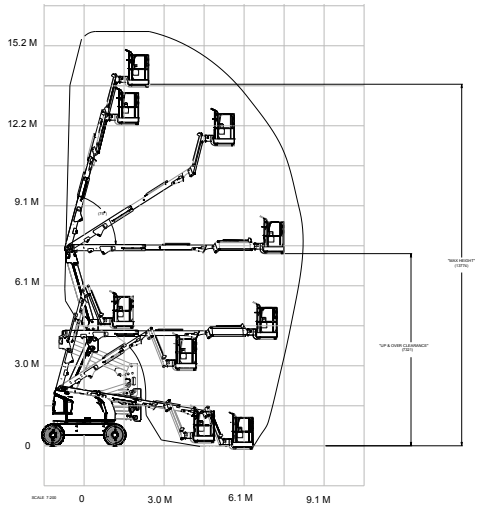

Dimensions

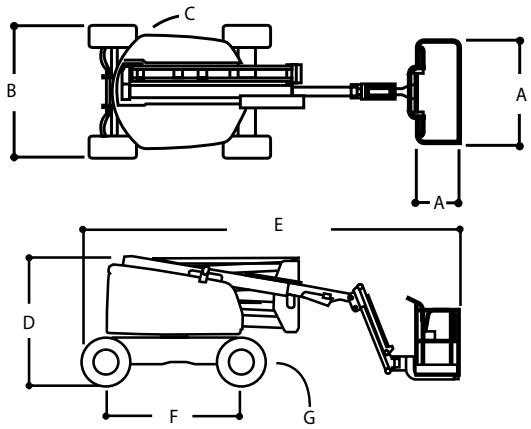

IMPORTANT

JLG is continually researching and developing products and reserves the right to make modifications without prior notice. All data in this document is indicative. Certain options or country standards will increase weight. Specifications may change to meet country standards or with the addition of optional equipment.

JLG EMEA BV

Polaris Avenue 63

2132 JH Hoofddorp

The Netherlands

Tel: +31 (0)23 565 5665

Fax: +31 (0)23 557 3750

www.jlg.com

Due to continuous product improvements, JLG Industries reserves the right to make specification and/or equipment changes without prior notification.

An Oshkosh Corporation Company

EQUILIFT SOLUCIONES EN EQUIPO DE ELEVACIÓN

844 881 0363

www.equilift.net

saltillo@equilift.com.mx

Renta, venta y servicio técnico